

ALUKÖNIGSTAHL SCHÜCO JANSEN

SCHÜCO PERFECT IN SCHÜCAL

Overview Schüco Perfect in SchüCal

CONTENT



01 Schüco Perfect

02 Schüco Perfect in SchüCal – Notes

03 Schüco AWS 75.SI+ Perfect

04 Schüco ASE 60 Perfect – Schüco ASE 80.HI Perfect

05 SchüCal Output Lists

06 Schüco Perfect Webinars

Tutorials Schüco Perfect in SchüCal

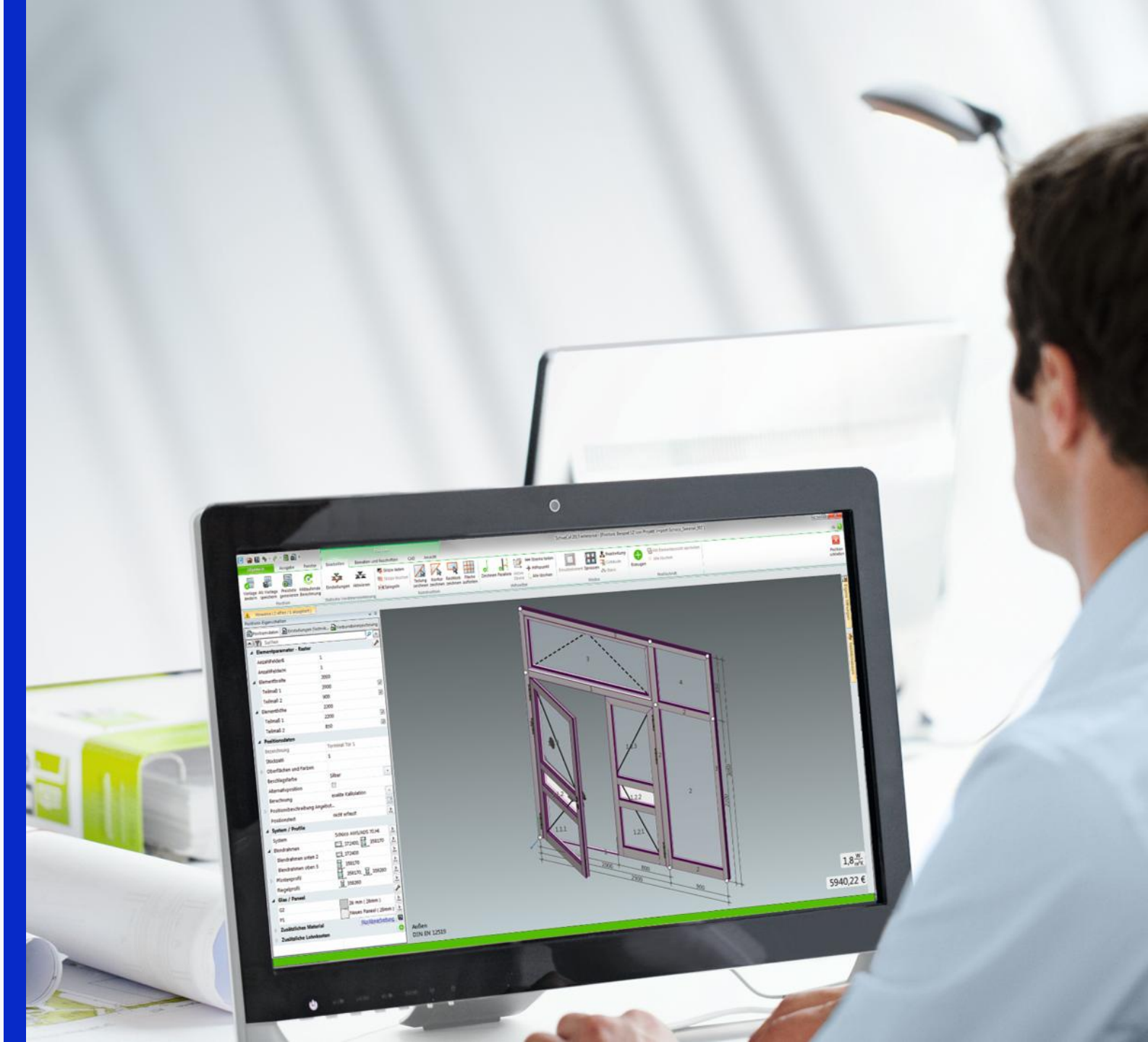

ALUKÖNIGSTAHL SCHÜCO JANSEN

01
Schüco Perfect

- Features and benefits

Start the tutorial with a click on the picture

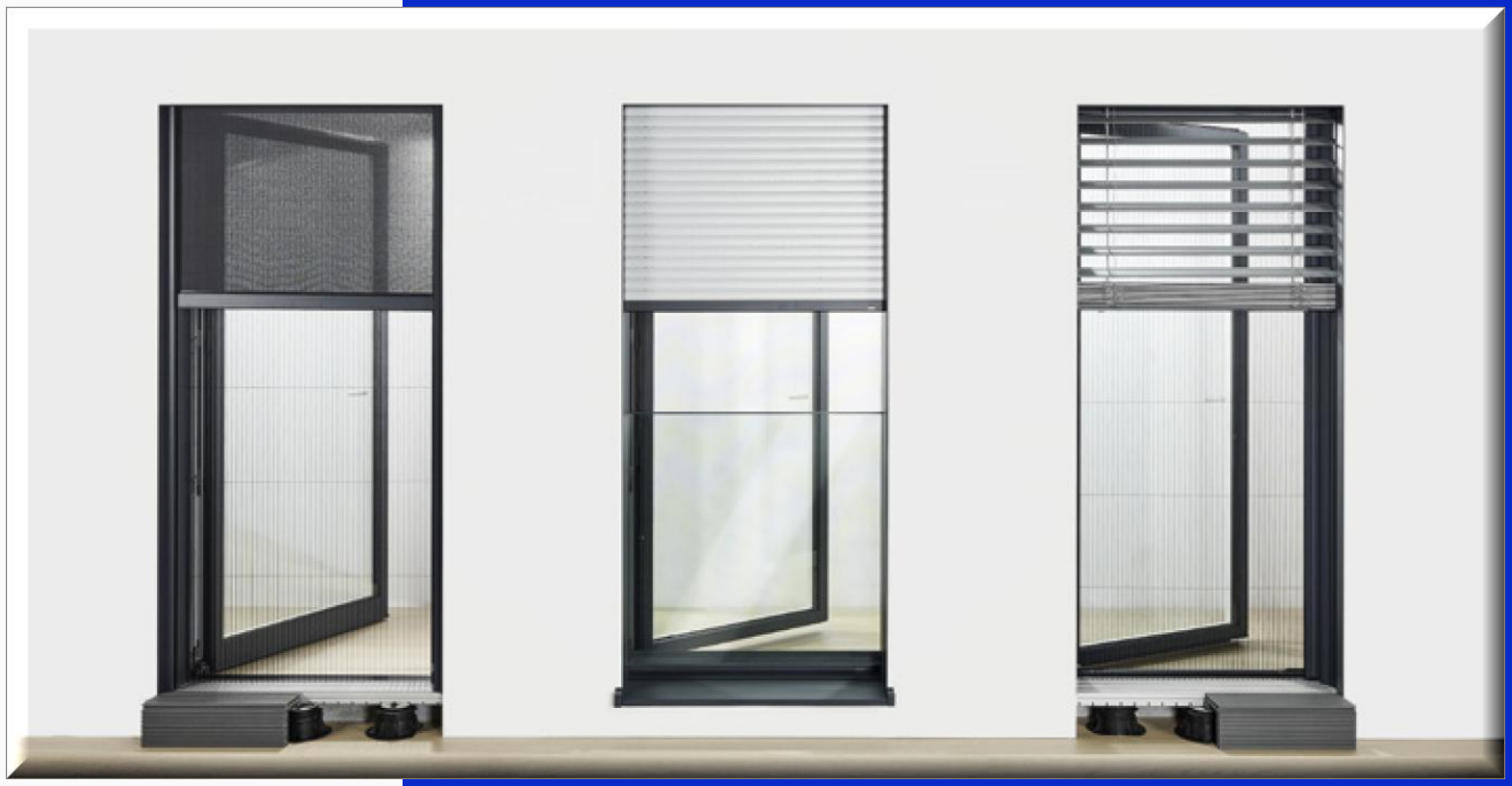

Approx. 01:30 (mm:ss)

<< back to table of content

02
Schüco Perfect Notes

- Additional Components activation code 663075
- Schüco AWS 75.SI Perfect

  Schüco ASE 60 Perfect

  Schüco ASE 80.HI Perfect
- CAD section details
- Surface finish group 50-59 Perfect
- Pre-rolled profile code

  Schüco Perfect profiles

Start the tutorial with a click on the picture

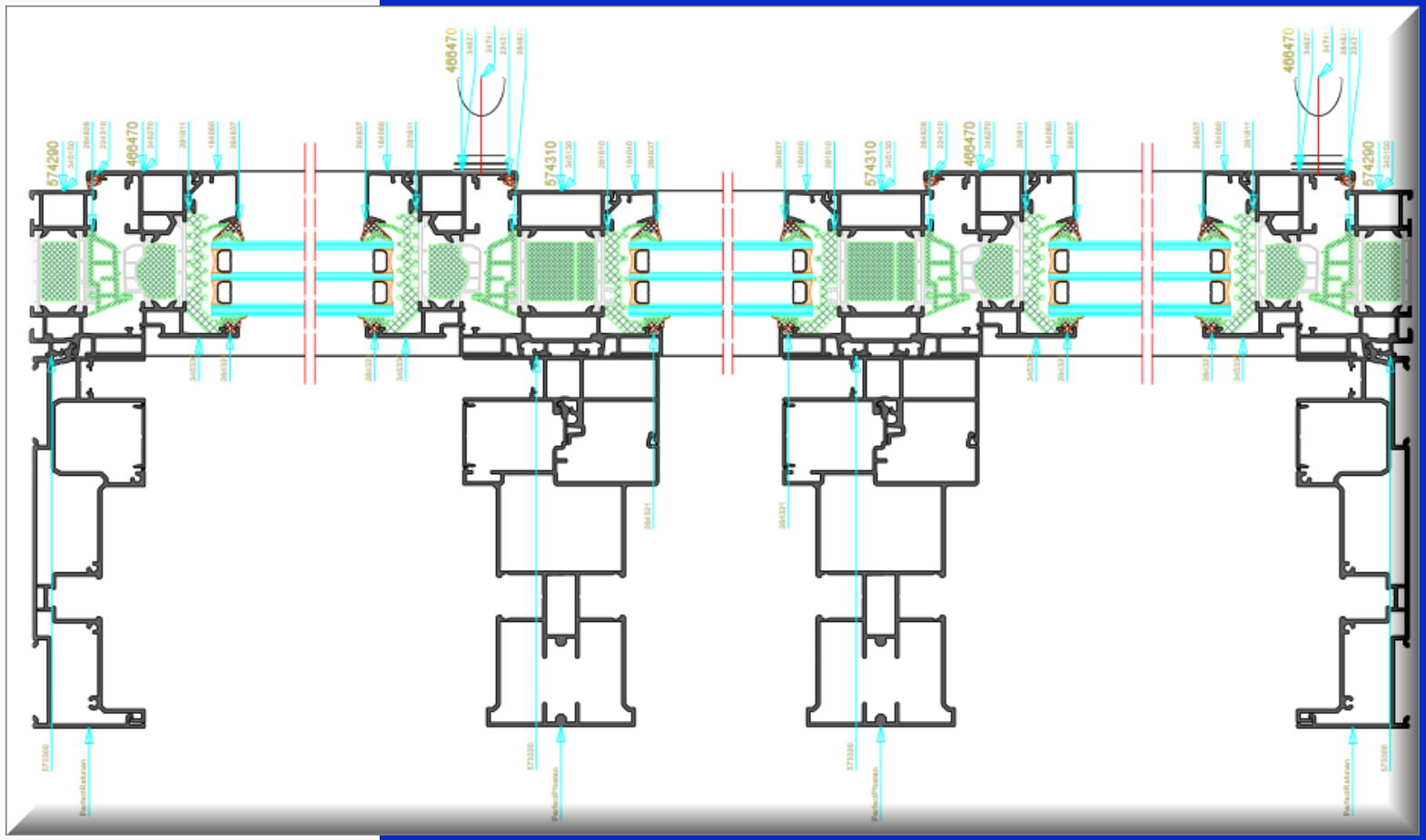

Approx. 01:15 (mm:ss)

<< back to table of content

03
Schüco Perfect in SchüCal

- Schüco AWS 75.SI+ Perfect

Start the tutorial with a click on the picture

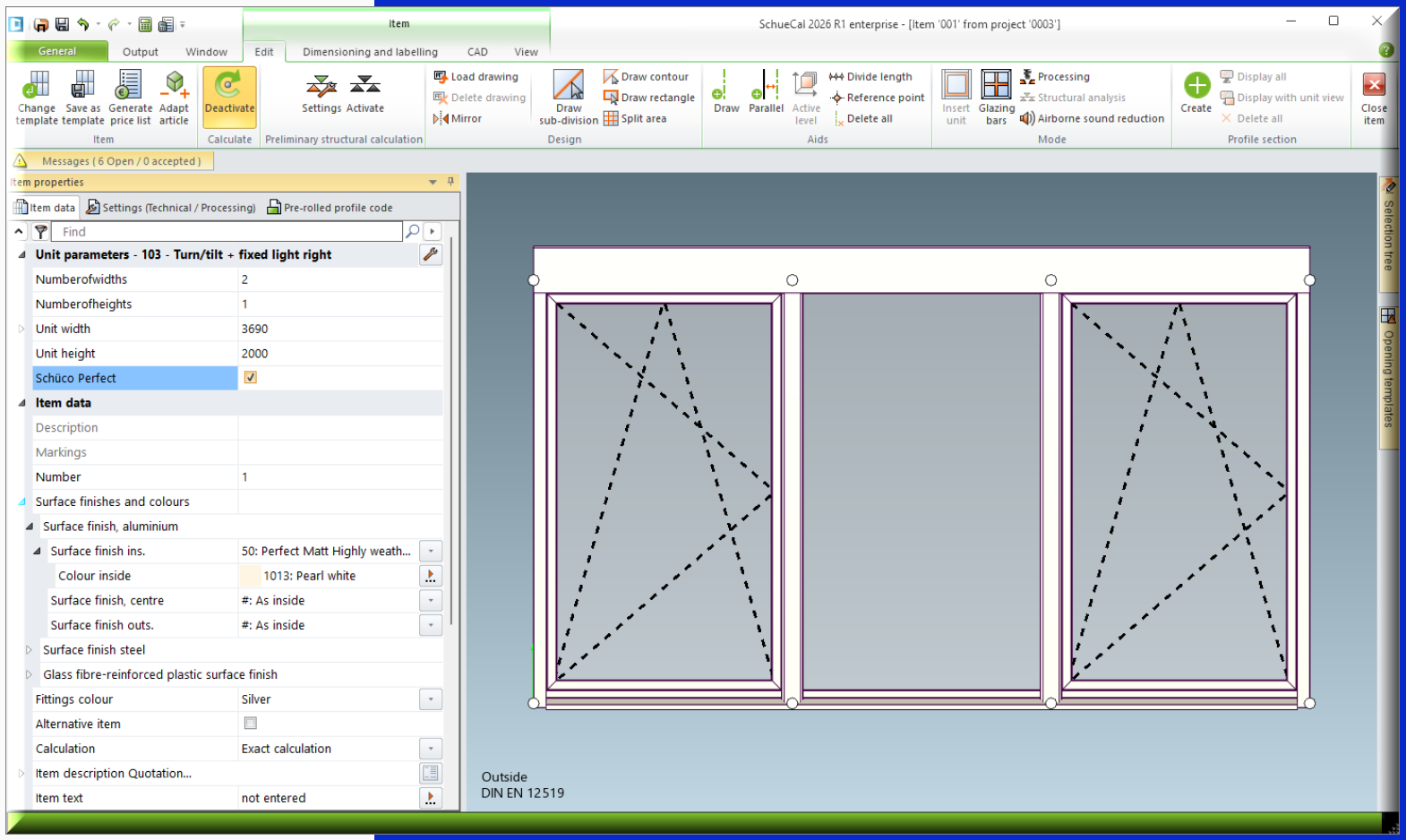

Approx. 02:00 (mm:ss)

<< back to table of content

04
Schüco Perfect in SchüCal

- Schüco ASE 60 Perfect
- Schüco ASE 80.HI Perfect

Start the tutorial with a click on the picture

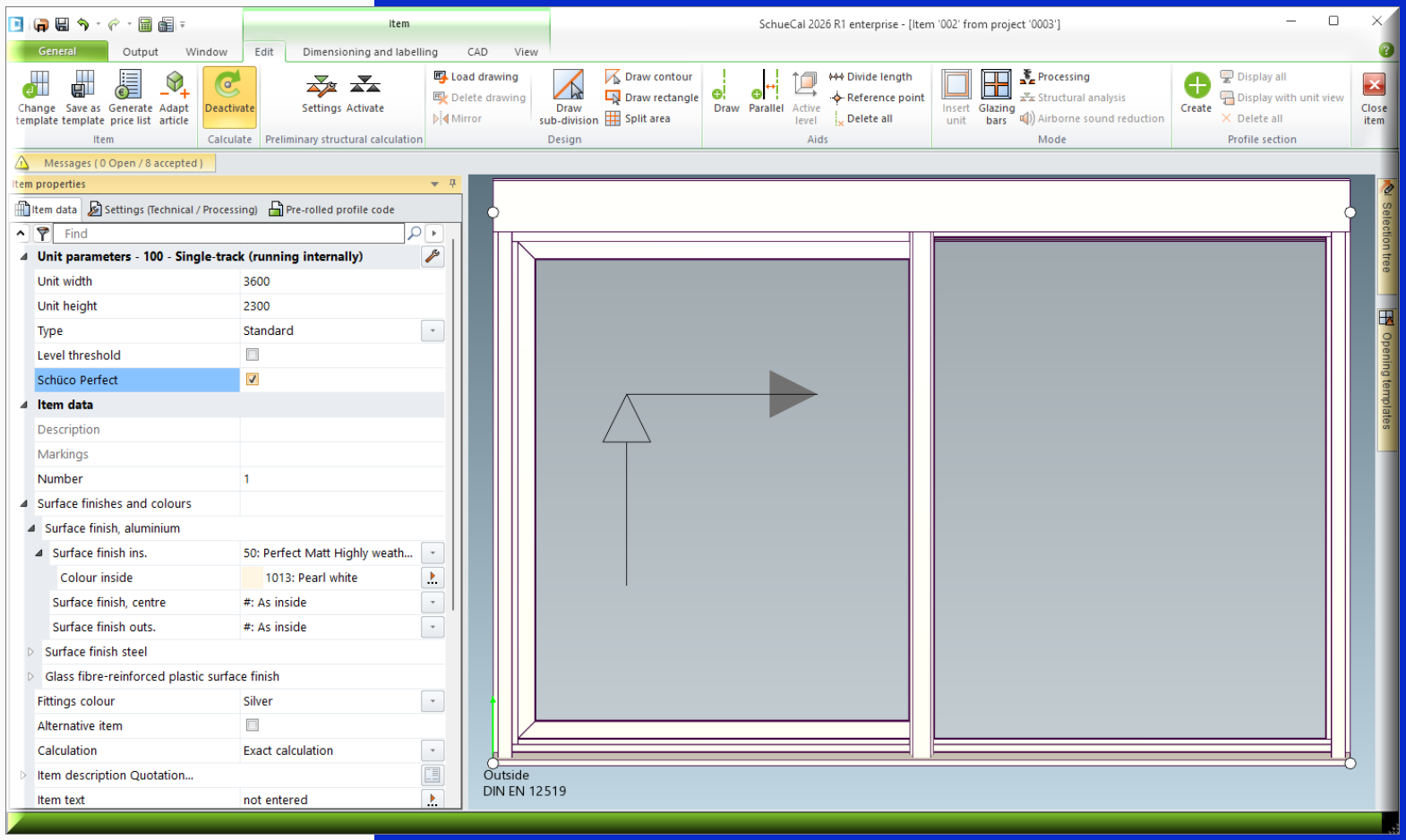

Approx. 01:45 (mm:ss)

<< back to table of content

05
SchüCal Output Lists

- Output lists sun shading

Start the tutorial with a click on the picture

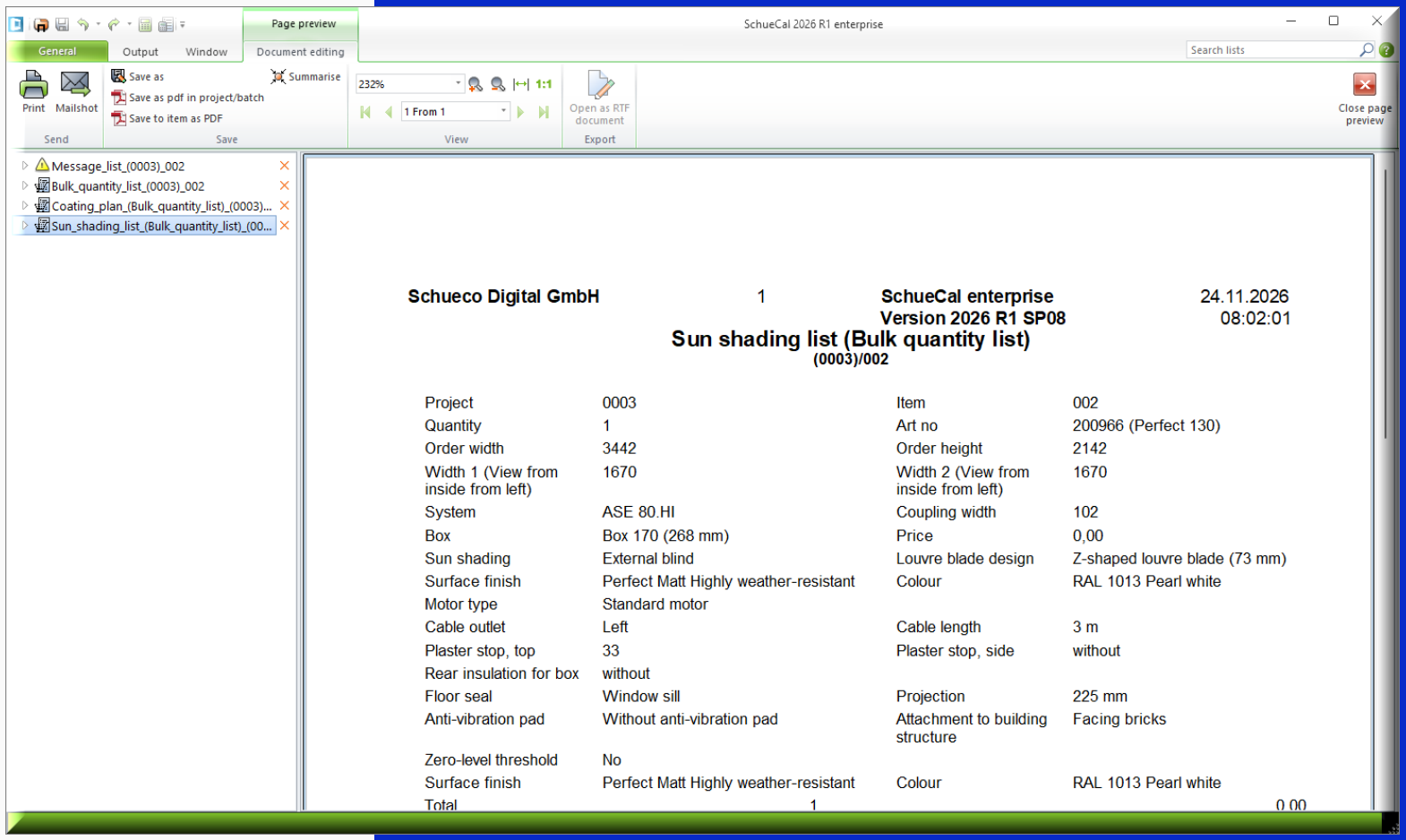

Approx. 00:45 (mm:ss)

<< back to table of content

06
Schüco Perfect Webinars

- Window door
- Slide and slide-and-lift element
- Ribbon window

<< back to table of content

Start the tutorial with a click on the picture

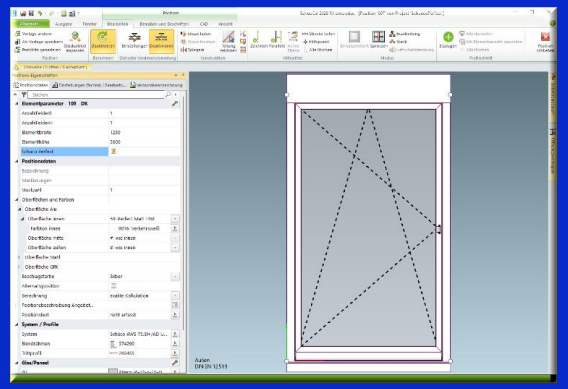

Window door – Approx. 09:15 (mm:ss)

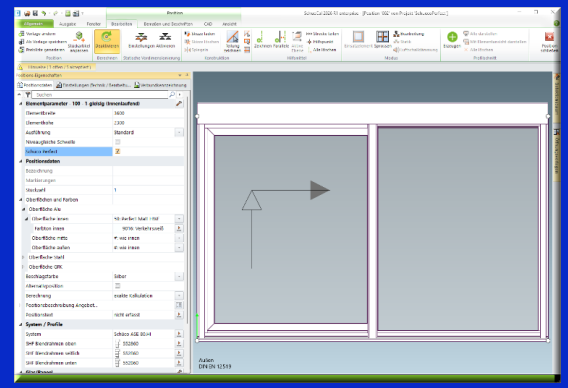

Sliding element – Approx. 03:45 (mm:ss)

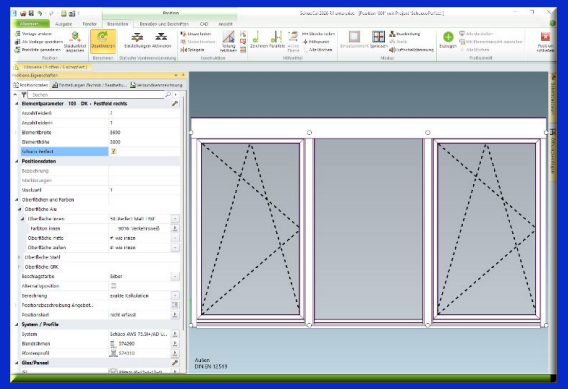

Ribbon window – Approx. 04:15 (mm:ss)

General Information

- Depending on your SchüCal license type and the user permissions assigned by your SchüCal administrator, the program interface shown in the tutorials may differ from your own specific program interface.

We are

Partners

Questions?

Please contact your local

Alukönigstahl partner.

www.alukoenigstahl.com

ALUKÖNIGSTAHL SCHÜCO JANSEN

